Code No.: **50432**

**MR15-2015-16 Batch**

# MALLA REDDY ENGINEERING COLLEGE (AUTONOMOUS)

(Affiliated to JAWAHARLAL NEHRU TECHNOLOGICAL UNIVERSITY HYDERABAD)

Gundlapochampally (H), Maisammaguda (V), Medchal (M), Medchal-Malkajgiri (Dist), Hyderabad

## IV B.TECH I SEMESTER SUPPLEMENTARY EXAMINATIONS, APRIL-2019

Subject: **Microwave Engineering**

Branch: **ECE**

**Time: 3 hours** **Max. Marks: 60**

### PART – A

Answer **ALL** questions of the following **5x2Marks=10 Marks**

1. Define Q of a cavity resonator.
2. This Differentiate between E-plane Tee and H-plane Tee.
3. List out the performance characteristics and applications of the two cavity klystron amplifier
4. Differentiate between ATD's and TED's.
5. Define VSWR.

### PART-B

Answer any **FIVE** Questions of the following **5x10 Marks= 50Marks**

1. Derive expression for quality factor and various types of coupling coefficients of rectangular cavity resonator.
2. a) Derive the scattering matrix for power coupling microwave junction and mention its ideal characteristics.
   b) Explain E-plane Tee junction.
3. a) What is TWT? Discusses about significance , Types and Characteristics of slow wave structures.
   b) Draw the different types of slow-wave structures and explain about helix TWT Amplification process.
4. Explain about the MMIC fabrication techniques
5. a) Explain about the general setup of the microwave bench
   b) Explain about measurement of the impedance using slotted line technique
6. A microstrip line is designed with alumina as dielectric constant $\varepsilon_r = 9.7$. The width and thickness are equal and has value 0.25mm. Find the following when the micro strip is operating at 5GHz.
   a) Effective dielectric constant
   b) Phase constant
   c) Microstrip wavelength
   d) Capacitance per unit length
   e) Characteristic impedance
7. a) Draw and explain the operation of circulator.
   b) Draw & explain the two-hole directional coupler.
8. Write short notes on any **TWO** of the following
   a) Resistive card attenuator
   b) Negative resistance in transferred electron devices.
   c) Microstrip lines.

Code No.: **50433** | **MR15**

# MALLA REDDY ENGINEERING COLLEGE (AUTONOMOUS)

(Affiliated to JAWAHARLAL NEHRU TECHNOLOGICAL UNIVERSITY HYDERABAD)

Gundlapochampally (H), Maisammaguda (V), Medchal (M), Medchal-Malkajgiri (Dist), Hyderabad

## IV B.TECH I SEMESTER SUPPLEMENTARY EXAMINATIONS, APRIL-2019

Subject: **VLSI Design**

Branch: **ECE**

**Time: 3 hours** **Max. Marks: 60**

### PART – A

Answer **ALL** questions of the following **5x2Marks=10 Marks**

1. Define Lithography.
2. Derive the output conductance of MOS transistor?
3. What is the purpose of Design rules?
4. Write about peripheral capacitance.
5. Write the differences between channel gate array and channel less gate array.

### PART-B

Answer any **FIVE** Questions of the following **5x10 Marks= 50Marks**

1. a) Explain about metallization process.
   b) In what way PMOS fabrication is different from NMOS fabrication.
2. a) What is the effect of $Z_{pu}/Z_{pd}$ ratio on transfer characteristics of NMOS inverter
   b) Explain how the BiCMOS inverter performance can be improved?
3. a) What are the limitations of scaling?
   b) Write the effect of Scaling on power dissipation per gate, gate capacitance.
4. a) Find the resistance of NMOS inverter having $L=8\lambda$ and $W=2\lambda$ the having $R_s=10^4$
   b) Discuss about NPCMOS logic.
5. a) Explain a 4 bit serial-parallel multiplier.
   b) Briefly explain the significance of ASIC and FPGA.
6. a) Compare NMOS, CMOS and BICMOS technologies.
   b) Explain the operation of Depletion mode transistor.
7. a) Derive the drain current and drain voltage relationship for an N-channel Enhancement MOSFET for different regions of operation for non saturated region.
   b) Explain about the BiCMOS inverters with neat diagrams.
8. Write short notes on any **TWO** of the following
   a) Gate capacitance ($C_g$)
   b) Basic architecture of adder
   c) Effect of scaling on carrier density on channel

Code No.: **50437** | **MR15 (2015-16 Batch)**

# MALLA REDDY ENGINEERING COLLEGE (AUTONOMOUS)

(Affiliated to JAWAHARLAL NEHRU TECHNOLOGICAL UNIVERSITY HYDERABAD)

GundlapochampALLy (H), Maisammaguda (V), Medchal (M), Medchal-Malkajgiri (Dist), Hyderabad

## IV B.TECH I SEMESTER SUPPLEMENTARY EXAMINATIONS, APRIL-2019

Subject: **Optical Communications**

Branch: **ECE**

**Time: 3 hours** **Max. Marks: 60**

### PART – A

Answer **ALL** questions of the following **5x2Marks=10 Marks**

1. List out the differences between skew ray and meridional ray.
2. Distinguish between extrinsic and intrinsic absorption.
3. What are Laser diodes?
4. What are the types of LED configurations?
5. Draw the eye diagram with their parts.

### PART-B

Answer any **FIVE** Questions of the following **5x10 Marks= 50Marks**

1. a) Explain in detail the graded index fibers with neat diagrams.

   b) A multimode step index fiber with a core diameter of 80um and a relative index difference of 1.5% is operating at wave length of 0.85um. if the core refractive index is 1.48, estimate.

   i) The normalized frequency for the fiber.

   ii) The number of guided modes.
2. a) Discuss on scattering losses and radiation losses in an optical fiber in detail.

   b) What are the various optical fiber connectors? Explain.
3. a) Explain in detail about multimode and single mode fiber joints.

   b) Derive an expression for the internal optical power generated in LED.
4. a) Explain the principle of analog receiver.

   b) Explain the quantum limit in optical fiber system.
5. a) Explain about overall fiber dispersion in single mode fiber.

   b) Briefly explain the concept of eye pattern.
6. a) An optical fiber has a numerical aperture of 0.20 and a cladding refractive index of 1.59. Determine:

   (i) the acceptance angle for the fiber in water which has a refractive index of 1.33;

   (ii) the critical angle at the core-cladding interface.

   b) What is mode coupling. Discuss in detail step index fibers and graded index fibers.
7. a) What is dispersion? Discuss various types of dispersion.

   b) What is scattering? Discuss linear and non-linear scattering losses.
8. Write short notes on any **TWO** of the following

   a) Power Band width product b) Line coding in optical links c) Skew rays

Code No.: **50434**

**MR15 (2015-16 Batch)**

# MALLA REDDY ENGINEERING COLLEGE (AUTONOMOUS)

(Affiliated to JAWAHARLAL NEHRU TECHNOLOGICAL UNIVERSITY HYDERABAD)

GundlapochampALLy (H), Maisammaguda (V), Medchal (M), Medchal-Malkajgiri (Dist), Hyderabad

## IV B.TECH I SEMESTER SUPPLEMENTARY EXAMINATIONS, APRIL-2019

Subject: **Digital Image Processing**

Branch: **ECE**

**Time: 3 hours** **Max. Marks: 60**

### PART – A

Answer **ALL** questions of the following **5x2Marks=10 Marks**

1. Write the expression to find the number of bits required to store a digital image.
2. Define slant transform.
3. What do you mean by point processing?
4. Explain about color model in color image processing
5. Define interpixel redundancy.

### PART-B

Answer any **FIVE** Questions of the following **5x10 Marks= 50Marks**

1. a) Explain the various types of connectivity relations between pixels with an example of each. **6M**

   b) Explain the neighboring of relationship between pixels. **4M**
2. a) Determine the Kernel coefficient of 2D walsh transform for N=4. **7M**

   b) List the properties of Walsh transform. **3M**
3. a) Explain median and max filtering approaches.

   b) Compare spatial domain and frequency domain image enhancement techniques.
4. a) Compare image enhancement and restoration.

   b) Differentiate between constrained least squares restoration and interactive restoration.
5. a) Explain process of edge detection in image segmentation.

   b) What is the need for image compression?
6. Explain the various types of distance measures with an example.
7. a) Determine the Kernel coefficients of 2D DCT for N=4. **(7M)**

   b) Discuss the properties of Discrete Cosine Transform. **(3M)**
8. Write short notes on any **TWO** of the following

   a) Adaptive thresholding

   b) Image compression standards.

   c) Convolution property of 2D-DFT.

Code No.: **50208**

**MR15- 2015-16 Batch**

# MALLA REDDY ENGINEERING COLLEGE (AUTONOMOUS)

(Affiliated to JAWAHARLAL NEHRU TECHNOLOGICAL UNIVERSITY HYDERABAD)

Gundlapochampally (H), Maisammaguda (V), Medchal (M), Medchal-Malkajgiri (Dist), Hyderabad

## IV B.TECH I SEMESTER SUPPLEMENTARY EXAMINATIONS, APRIL-2019

Subject: **Control Systems**

Branch: **ECE**

**Time: 3 hours** **Max. Marks: 60**

### PART – A

Answer **ALL** questions of the following **5x2Mark=10 Marks**

1. What is the use of Mason's gain formula?
2. Write the effects of proportional integral systems.
3. Define qualitative stability.
4. Define phase margin
5. Explain the concept of state variables.

### PART-B

Answer any **FIVE** Questions of the following **5x10 Marks= 50Marks**

1. a) What are the advantages and disadvantages of closed loop systems. (4)

   b) Obtain the transfer function Y(s) / X(s) of the signal flow graph shown in figure below: (6)

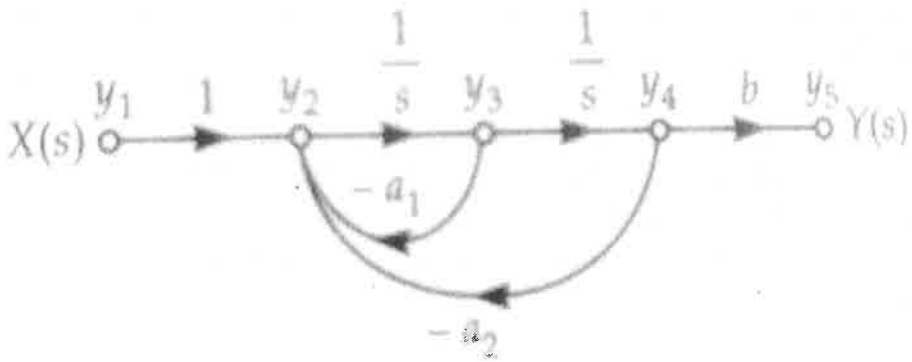


2. a) Obtain the time response of a first order system for a unit ramp input and plot its response.

   b) The open loop transfer function of unity feedback system is $G(S)=\frac{10}{S(S+2)}$ ,determine the nature of the system for unit step input and also determine rise time, peak time and peak overshoot.

3. By Routh stability criterion, determine stability of a system whose characteristic equation $9s^5-20s^4+10s^3-s^2-9s-10=0$. Comment on the location of roots.

4. Sketch the Bode plot for the following transfer function and determine the system gain 'K' for gain cross over frequency to be 5 rad/sec. $G(s) = \frac{ks^2}{(1+0.2s)(1+0.02s)}$

5. a) State and explain the concepts of controllability and observability. 4M

   b) Determine the state model of the system characterized by the differential equation $(s^4+4s^3+2s^2+s+6)y(s) = 10\ U(s)$ 6M

6. a) Explain the necessity and effects of feedback in control system 4M
   b) Determine the overall transfer function Y(s)/R(s) for the below system 6M

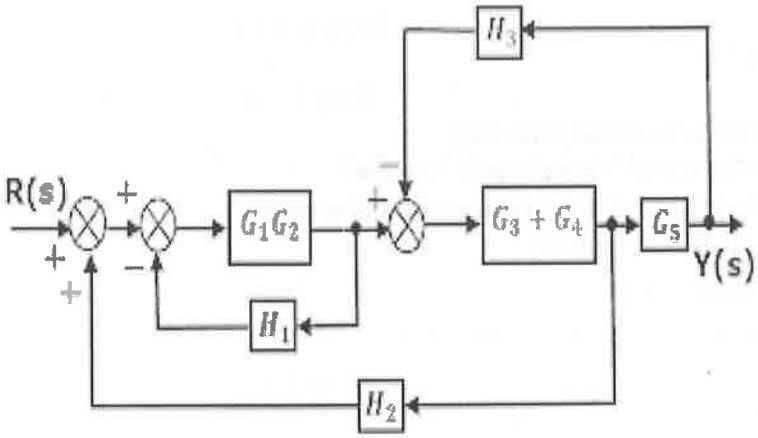


7. a) Discuss about standard test signals with the relevant diagrams and equations.
   b) List out the time domain specifications. Give expressions for calculation of these specifications.

8. Write short notes on any **TWO** of the following
   a) What are the advantages and disadvantages of open loop control system?
   b) Write the differences between lag and lead compensator.
   c) What the condition for stability in R-H stability criterion.

Code No.: **50H13**

**MR15**

# MALLA REDDY ENGINEERING COLLEGE (AUTONOMOUS)

(Affiliated to JAWAHARLAL NEHRU TECHNOLOGICAL UNIVERSITY HYDERABAD)

Gundlapochampally (H), Maisammaguda (V), Medchal (M), Medchal-Malkajgiri (Dist), Hyderabad

## IV B.TECH I SEMESTER SUPPLEMENTARY EXAMINATIONS, APRIL-2019

Subject: **Management Science**

Branch: **Common to EEE, ECE & CSE**

**Time: 3 hours** **Max. Marks: 60**

### PART – A

**Answer ALL questions of the following** **5x2Mark=10 Marks**

1. Nature of Management?
2. Decentralization.
3. What is Work Study?
4. Define critical path?
5. Business Process Outsourcing.

### PART-B

**Answer any FIVE Questions of the following** **5x10 Marks= 50Marks**

1. a) Illustrate System Approaches.
   b) Write about Herzberg's two factory theory of motivation.
2. a) What is departmentation and decentralization in business? Explain with examples.
   b) Explain Line and staff organizational structure with example.
3. a) Explain in detail method study and time management?
   b) Explain the marketing strategies for businesses at different stages of product life cycle.
4. What is difference between Compare HRM vs PMIR
5. a) Steps in strategy formulation and implementation.
   b) Just-in-time system.
6. a) Discuss the criticism of scientific management?.
   b) Elucidate F W Taylors Scientific management principles.
7. a) What are the basic concepts related to Organization?
   b) Discuss the utility of organization structure in an organization.
8. Write short notes on any two of the following
   (a) Marketing mix
   (b)Explain the Principles of Plant layout.
   (c) Enterprise resource planning